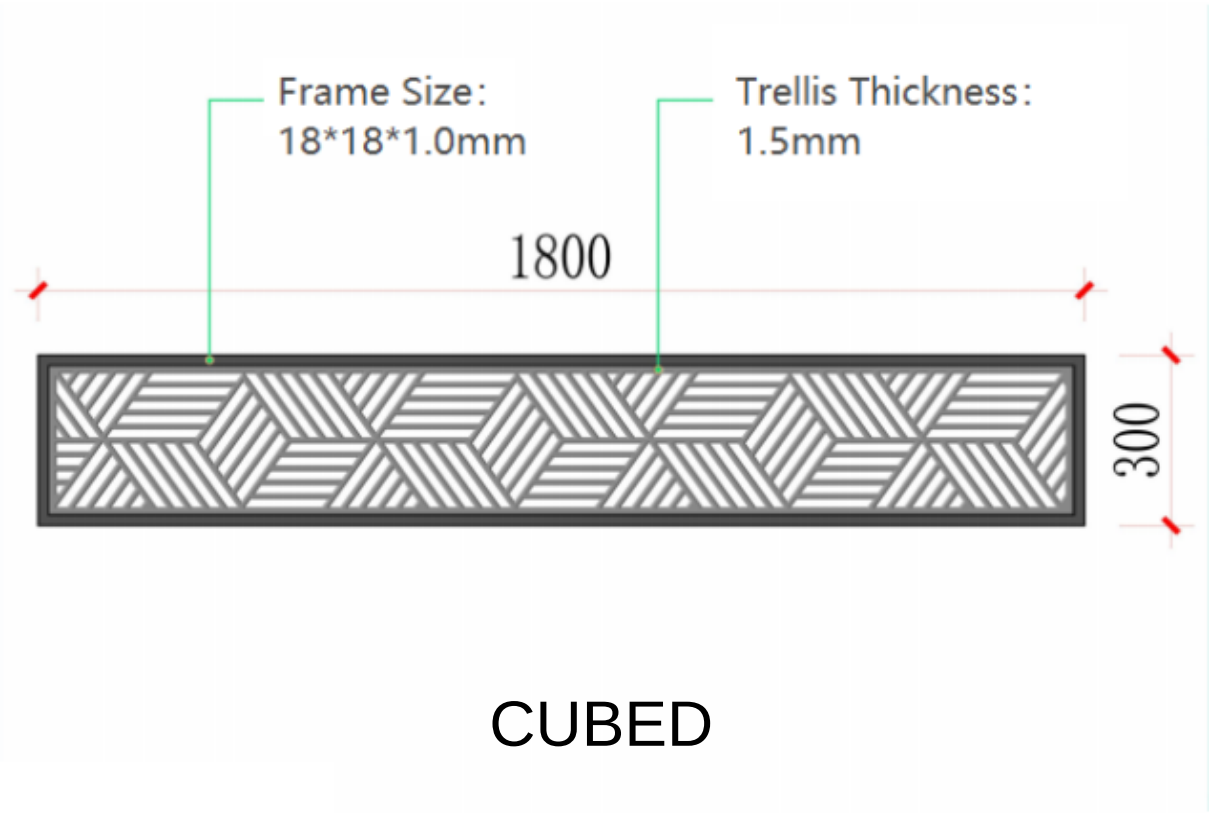

CUBED