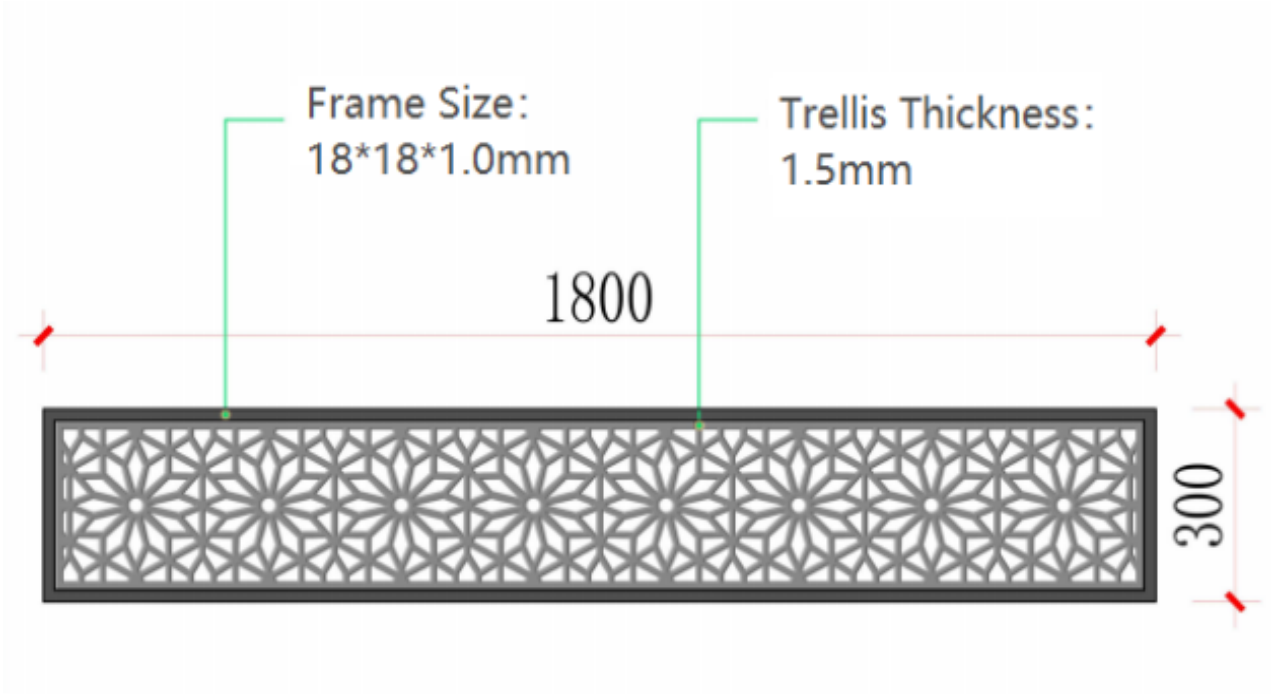

NARWA