Trustpilot

TrustScore **4.5** • **EXCELLENT**

"Fencing is top quality, delivery super fast. By far the best value for money. nowhere else came close on price or quality."

– "Angelo M, Manchester"

Fence Installation Guide



Chelsea SUPPLIES .COM

High-Performance Composite Fencing with a 20-Year Guarantee



SAFETY INSTRUCTIONS

When working on any construction project, we recommend wearing all possiblepersonal protective equipment (PPE) to keep yourself safe. This includes, but is not limited to, safety goggles, gloves, and respiratory protection.

TOOLS NEEDED FOR INSTALLATION



MITRE SAW

60 TEETH SAW BLADE.

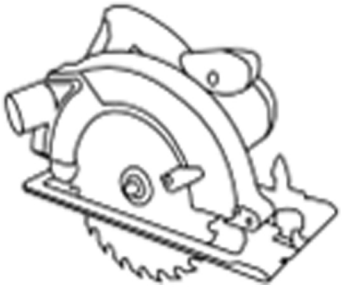

CIRCULAR SAW



GRINDER

ALUMINUM GRINDER BLADE.

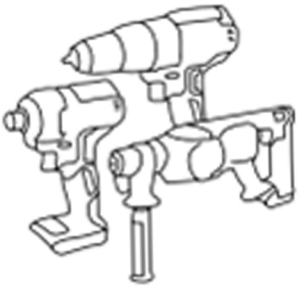

DRILLS

DRILL WITH HAMMER FUNCTION.
IMPACT DRIVER.



HAMMER



SHOVEL

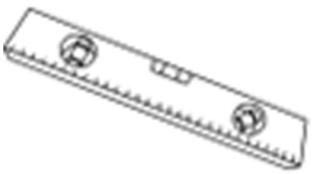

SPIRIT LEVEL

FENCE SET

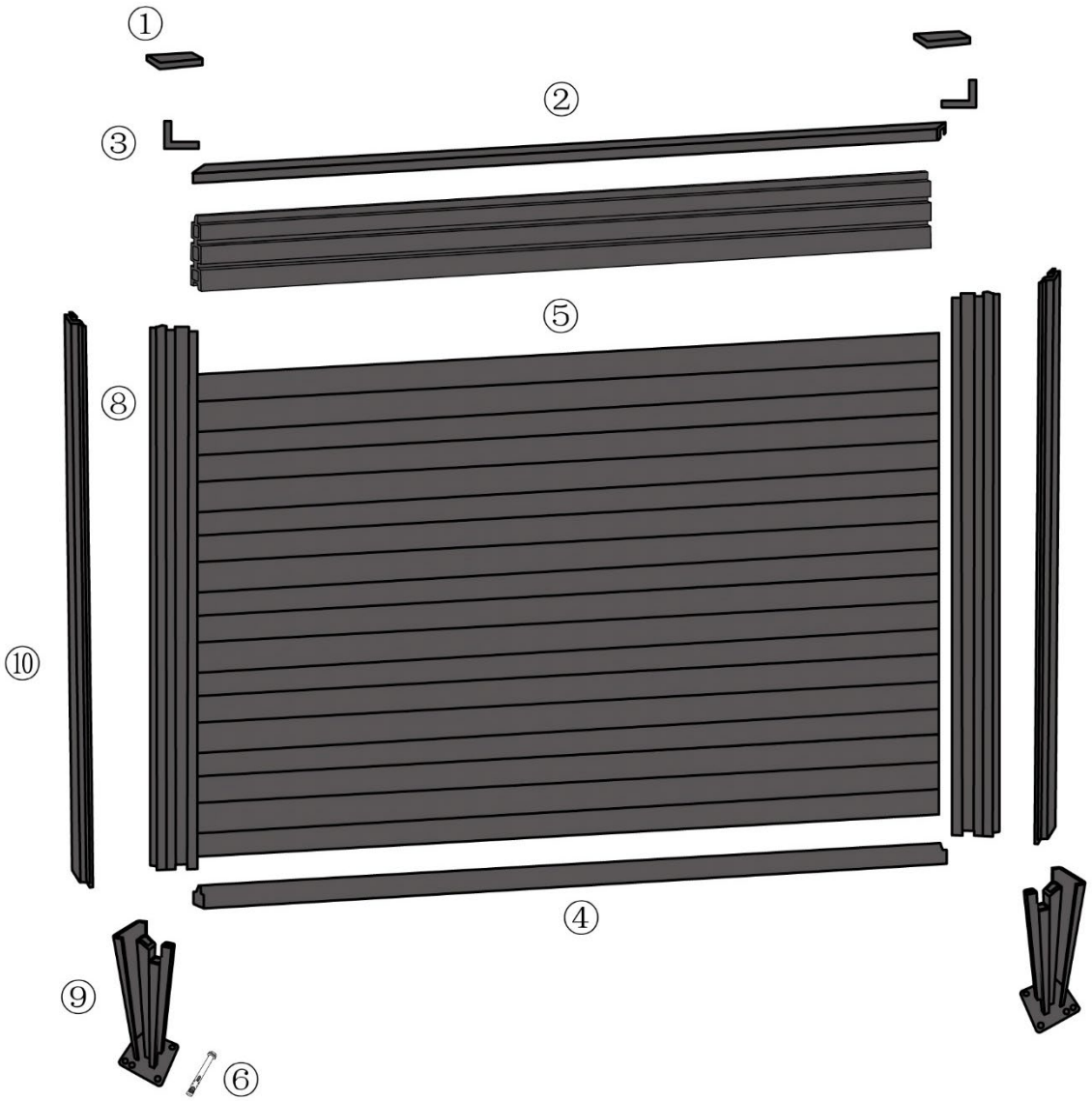

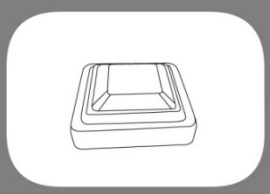

1. Cap

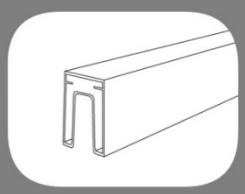

2. Top Rail



3. Corner Brackets

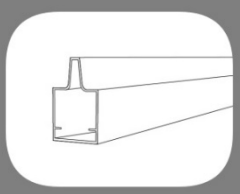

4. Bottom Rail

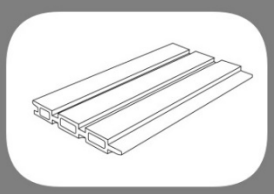

5. Fence Board



6. Expansion Screws



7. Post Screws



8. Base Post



9. Base

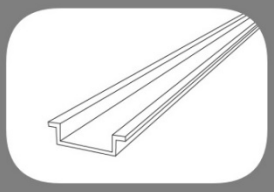

10. Post Infills

Installation Steps

Step 1: Post setup

PLANNING AHEAD

When planning your modular fence, you need to consider if it will turn to create a straight or L-Shape fence. If you want to turn a corner, you must install an aluminum post at the corner and use the center recess for the change in direction. This is illustrated in grey on the profile illustrations below. The spare recess of the aluminum post can be neatly hidden by the cover strips, which are supplied with the aluminum posts.

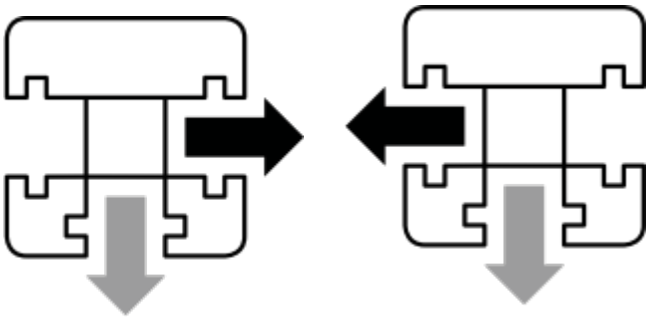

Method 1: Use Post Base to bolt the post onto concrete slab

Plan first, make sure each post center is 1780mm

1) Markup the post support location, make sure the post support center to center 1780mm.

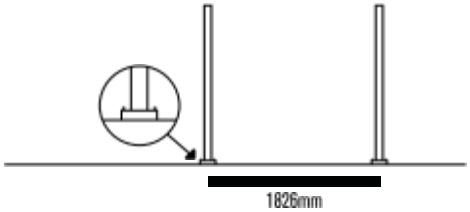

2) Mark hole position using pencil.

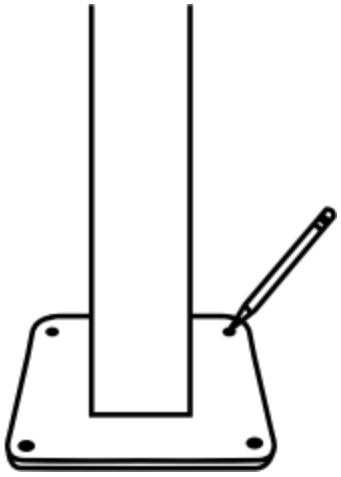

3) Drill the hole on the marked location. The hole size should be 12mm.

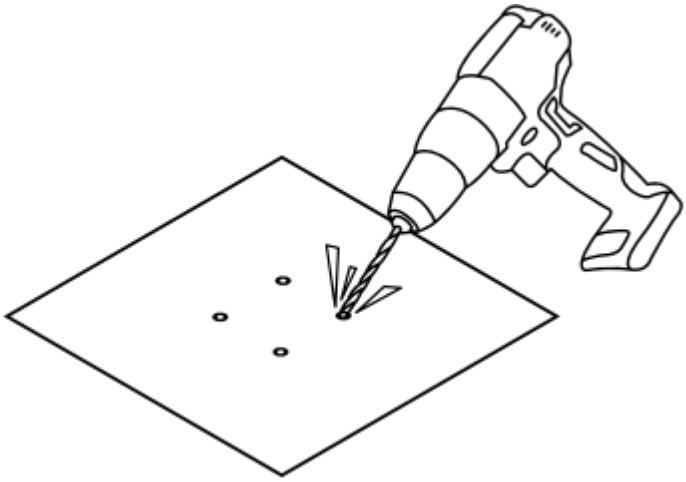

4) Secure post base by using m12 anchor bolts.

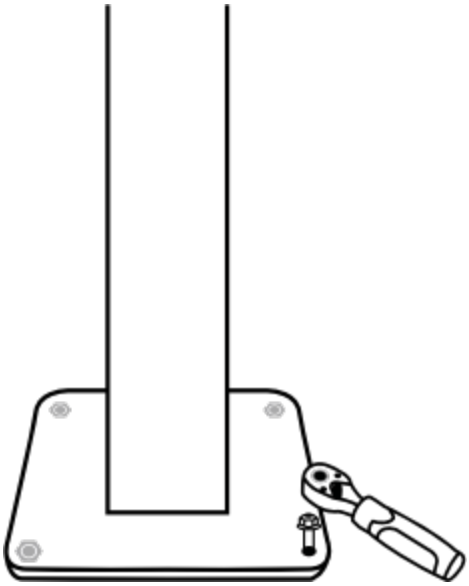

5) Put Post onto the base.

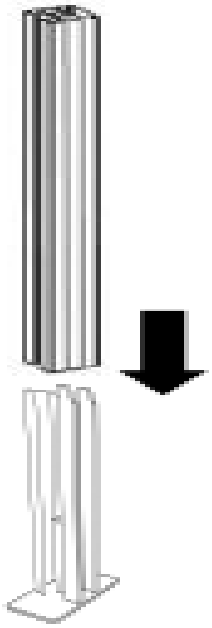

6) Put screws in the groove of the column to secure the post base and post together.

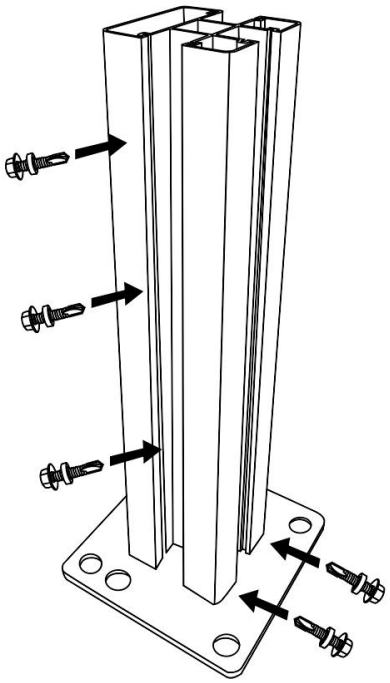

7) Insert the post side slip into the post internal channels to stand up.

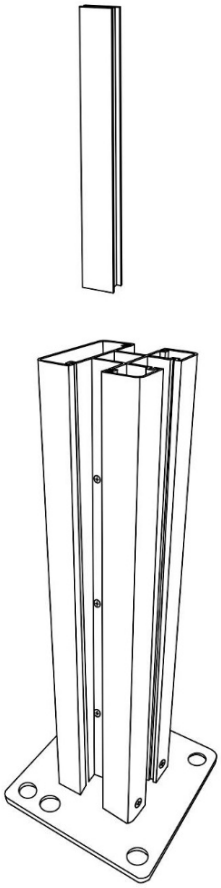

If start against wall

Use the wall starting post support, the wall post support is designed in rectangle shape not the squared to make sure there is no gap between the post and the wall.
The install step is similar with installing the normal post base.

1) Choose Starter post, position the long edge of the base against the wall.

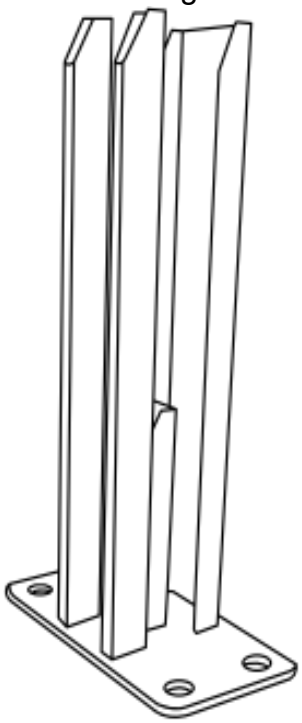

2) Anchor bolts to the hard ground surface, or buried into ground same as “Post Setup Method 1”.

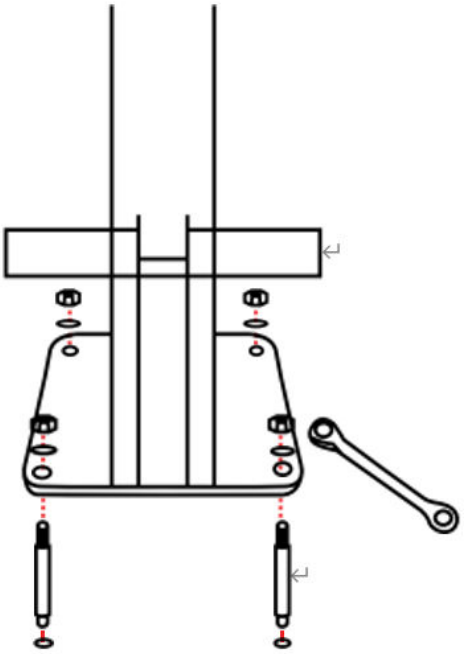

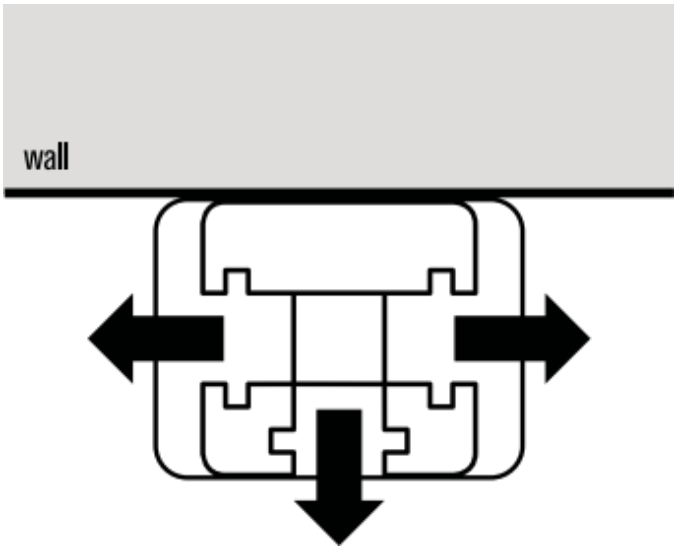

3) Plug post back to the post support.

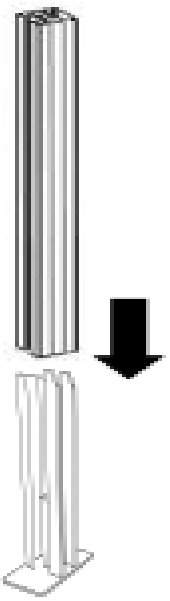

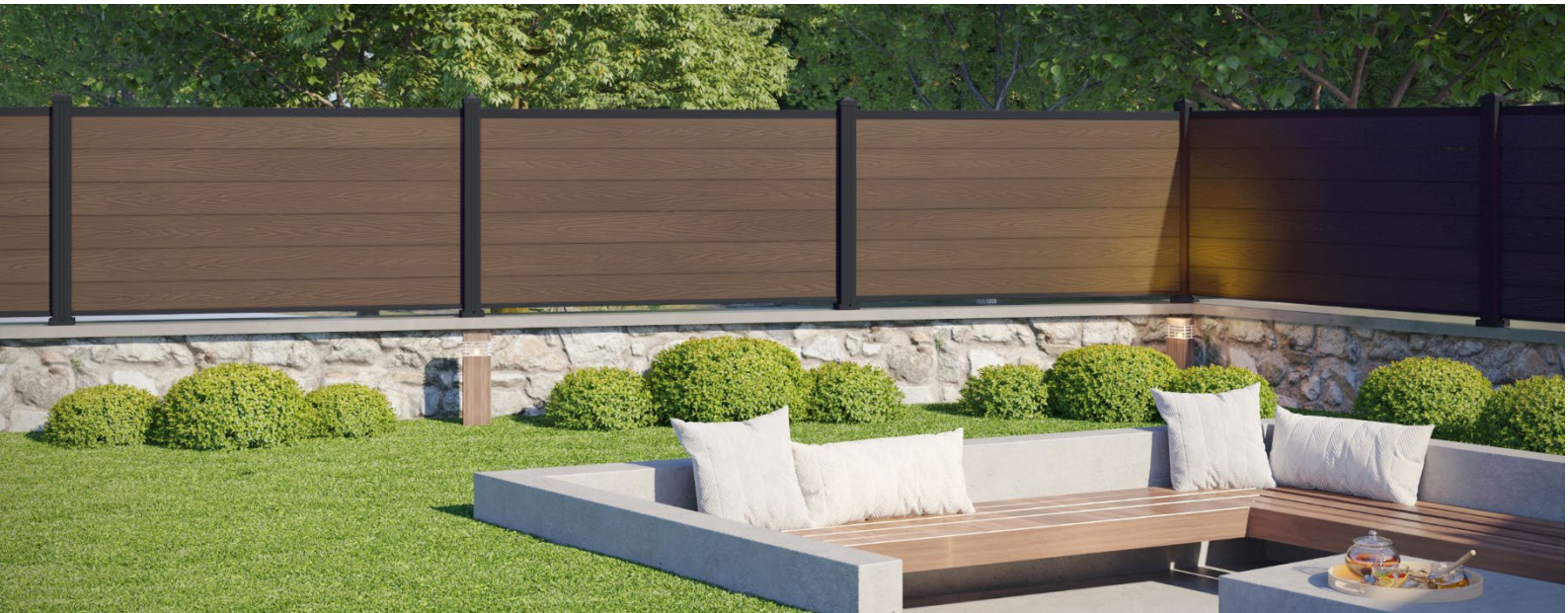

4) Secure the post to the wall to reach the maximum strength, use two 75mm x 6g anchor bolts, secure the post to the wall, the anchor bolt position as showing on the picture.

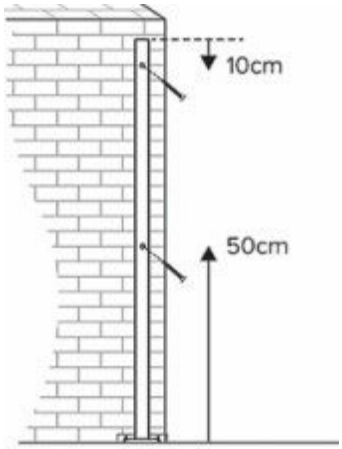

Method 2: Bury the post into ground

1) Make sure Post Centre to Post Centre is 1780mm.

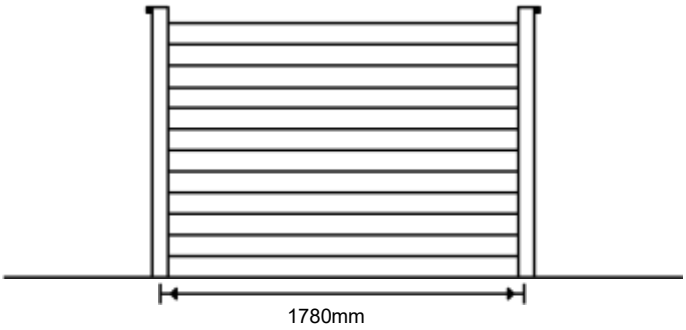

2) Dig footing 600mm depth, 350mm diameter, mass concrete footing.

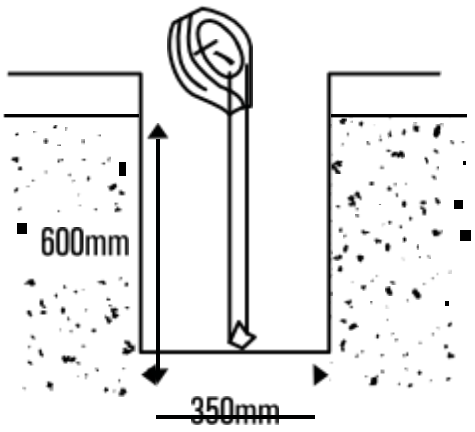

3) Place the first post into its hole, remove all recess infills and make sure all the recesses are facing the correct direction, have a helper to hold the post. Place a builder's line along the length of where the fence will be installed. Make sure it is in contact with the first post you are installing. You will use this line to make sure all your posts are installed in a straight line.

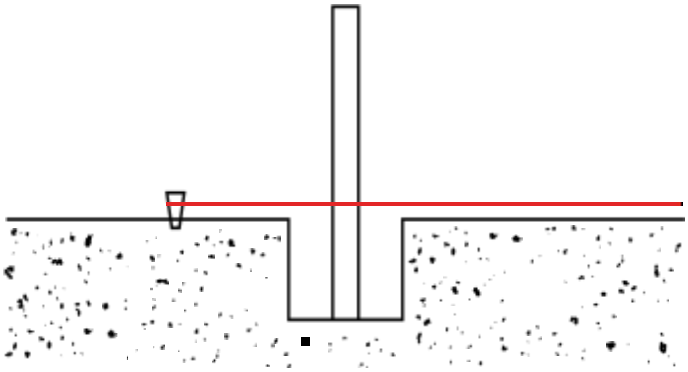

4) Check that the top of the post will be installed to the correct height required for your fence. This might involve checking the height of the panel or the finished height of the slats and checking this measurement against the post in the hole with a tape measure. Adjust the depth of the hole as required.

5) Use a spirit level to ensure the post is straight and make any minor adjustments needed. After checking the post is straight, ensure the post doesn't move until the concrete has set.

6) Before the concrete sets, use a shovel to smooth the concrete surface away from the installed post to ensure water runs away from the post.

7) Repeat the above steps to install all posts ensuring the center spacing is accurate and lined up to the builders line you installed in step 3. Do not install the slats until the concrete is set hard.

8) When concrete is set, put the post infills back to the spare recesses.

9) Install the other posts as described above, ensuring the centre-to-centre spacing is correct for each post as you go along the line one at a time. Let the concrete set hard (as per the product instructions) before installing the slats and panels.



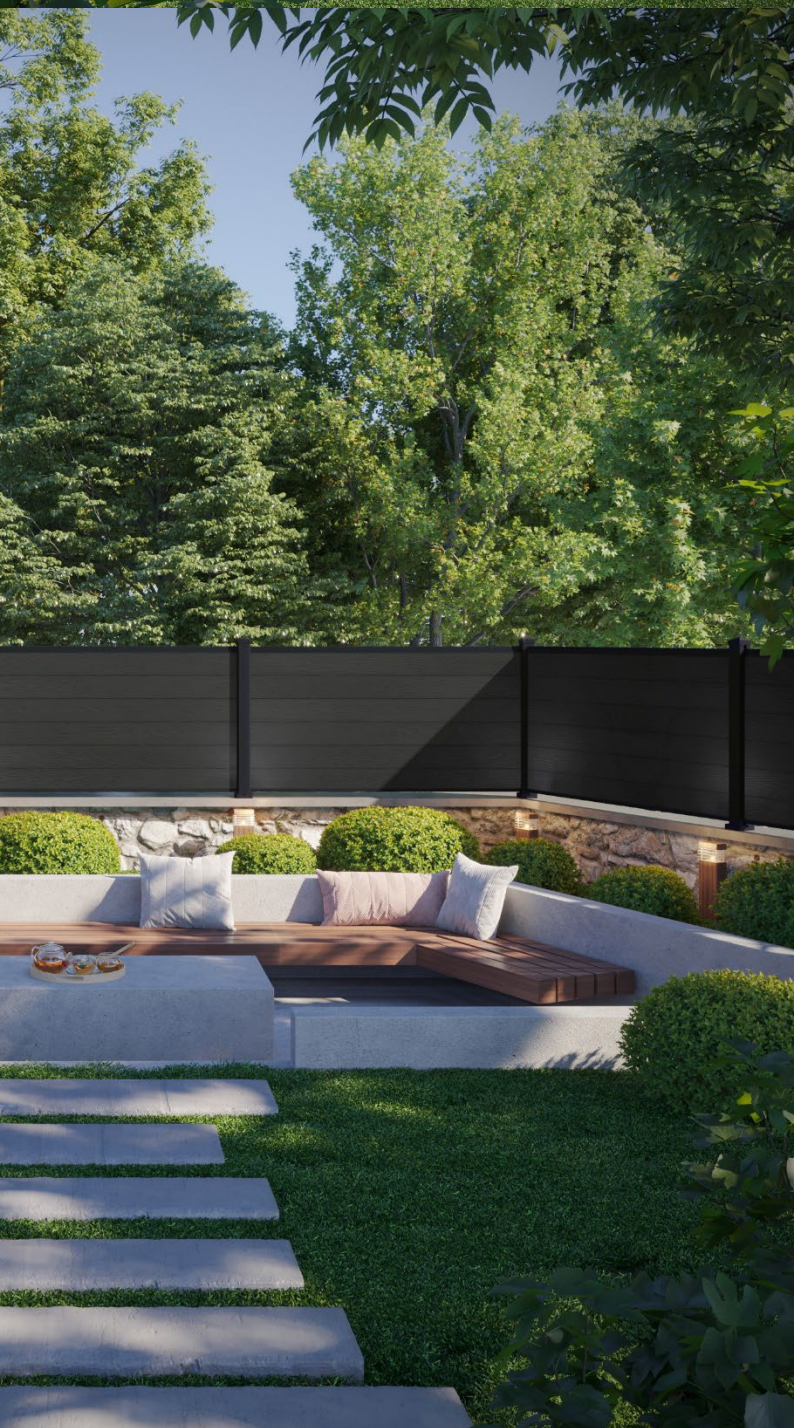

Step 2: Composite Fence Board Installation

The composite slats measure 155mm by 1790mm and come in a pack of three. One pack creates a height of 450cm and four packs stacks up to 1.8m. Aluminum start and end profiles are required to finish the bottom and top of the fence.

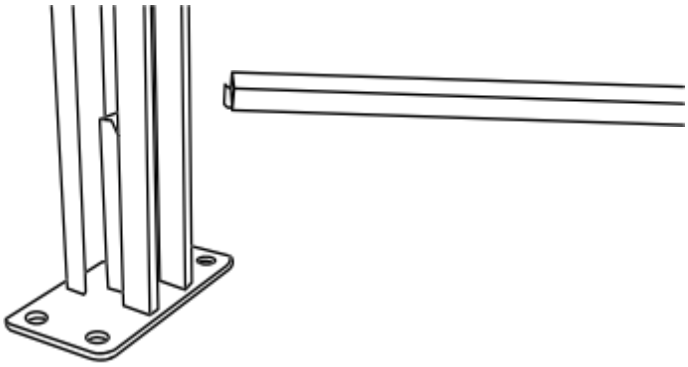

1) Slide starter bottom rail to the post channel and check if it is level.

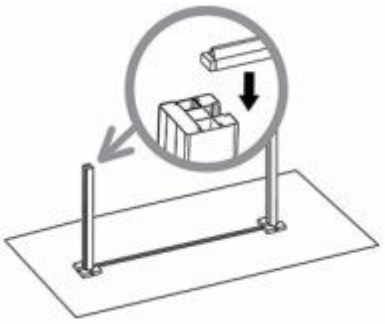

If you need to have a gap to the ground (sloped surface), the L shape corner bracket is designed to maintain the height between the ground to the bottom rail.

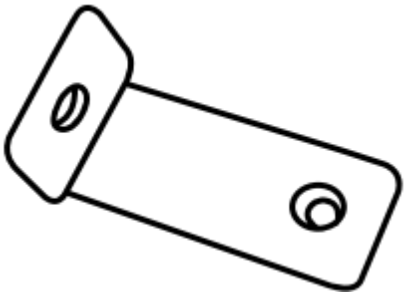

Insert the corner brackets (longer part face to outside, shorter part face to downside) to the post recess to the desired position on both of the posts.

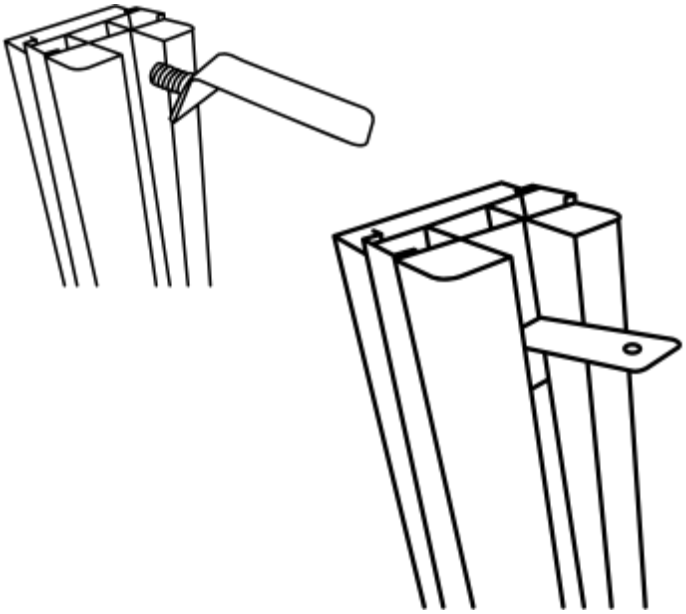

Secure the corner brackets using the provided screw with Hex Socket, then slide the bottom rail into the post channel. The bottom rail now sits on top of the bracket to archive the desired ground clearance.

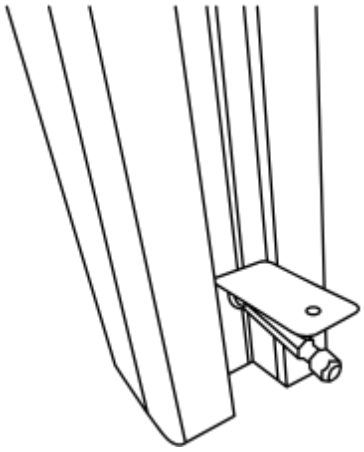

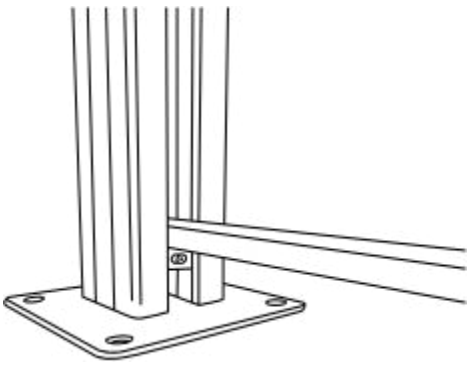

2) Slide the fence slate into the post recess, when the slats are in place, there will be an allowance for expansion/contraction of the boards.

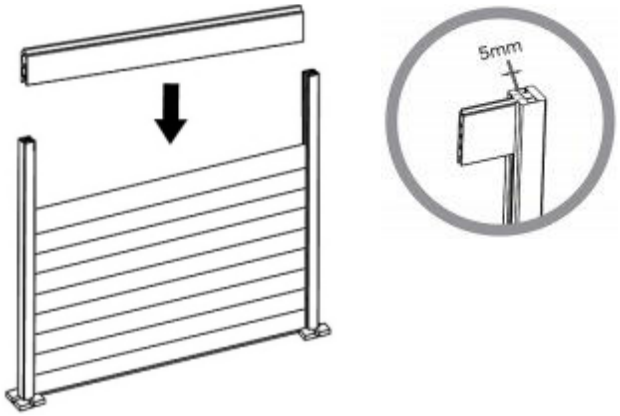

3) Once you've reached the desired height, put the top rail on the last board.

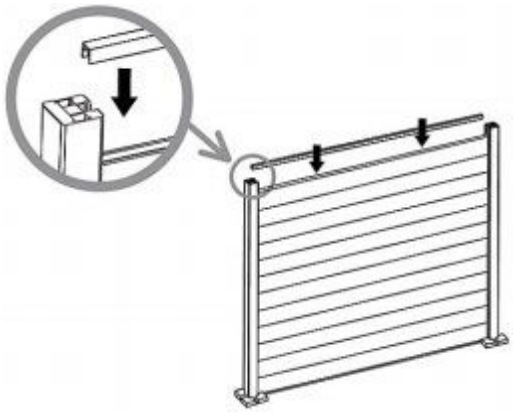

4) Use the corner bracket to secure the final slat and the top rail to the post. Slide on the corner bracket with the longer length resting on the top rail. Insert and tighten the hex socket cap to the post with the correct sized hex key.

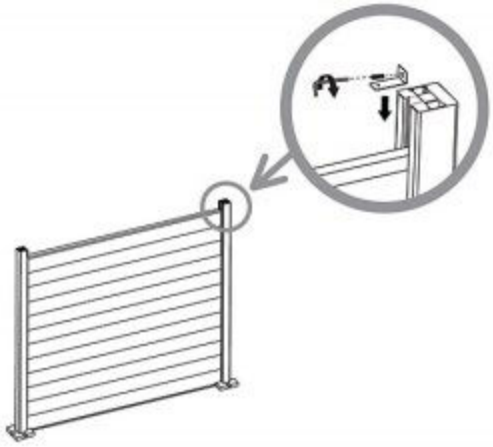

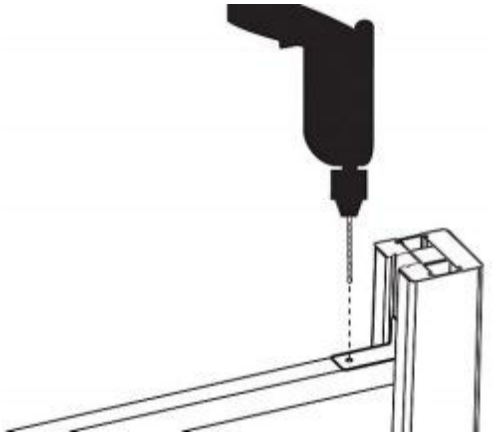

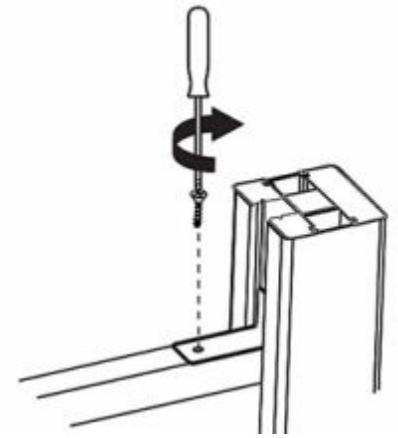

5) Add the plastic cap to the top of each post and your fence is completed.

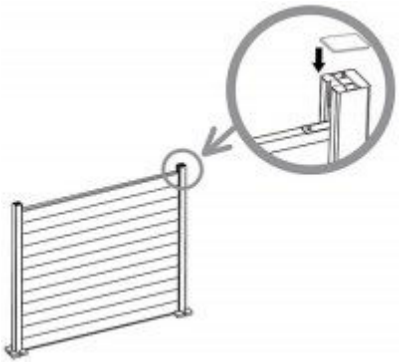




20 YEARS
WARRANTY



Get in Touch

Address:

Bridgeman Court Salop St Bolton
BL2 1DZ

Phone:

0330 995 1988

Opening Hours

Mon-Friday
9am - 5pm
Closed Bank Holidays

Email:
sales@chelseasupplies.com

Website:
www.chelseasupplies.com