# Decking Installation Guide

**Chelsea Supplies Ltd.**
Head Office: Bridgeman Court Salop Street, Bolton BL2 1DZ Greater Manchester

Distribution Center: Manningham Sawmills, Canal Rd, Bradford BD2 1AR

Tel: 0330 995 1988
email: Sales@chelseasupplies.com

# Chelsea Supplies Deck Installation Guide

## Important tips before use:

The ground should be flat and clean, the foundation should be strong enough. If it is a mud ground, a strong foundation such as a pile should be used to fix the joist; if it is a concrete ground, the thickness of the concrete ground should be ≥6cm. In case that the ground may crack, sink, or can't make the expansion tube (wood plug) be stressed well when drilling the holes. If the concrete ground is a closed low-lying place, it is necessary to ensure that there is at least one hole ≥10mm connected to the underground between every 2 meters' joist, so that the tagnant water can penetrate into the ground and avoid long-term water accumulation on the ground. It is better to use stainless steel screws or galvanized screws to ensure that they will not rust.

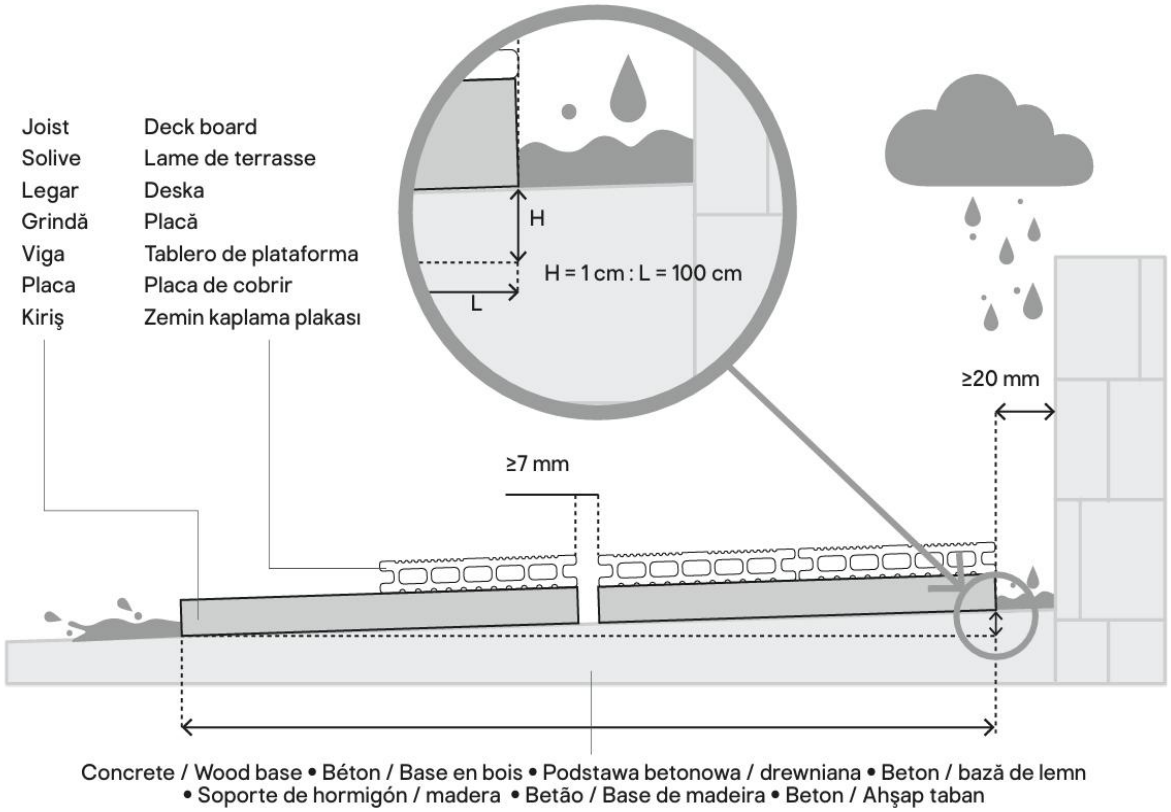

• For every 1 meter length of deck board the level needs to fall by 1 cm to achieve 1:100 (1%) run off.

• A minimum of 20 mm clearance between the wall and joists is required beneath deck board.

• Always lay deck boards groove direction in the same direction of the drainage gradient so water can run off.

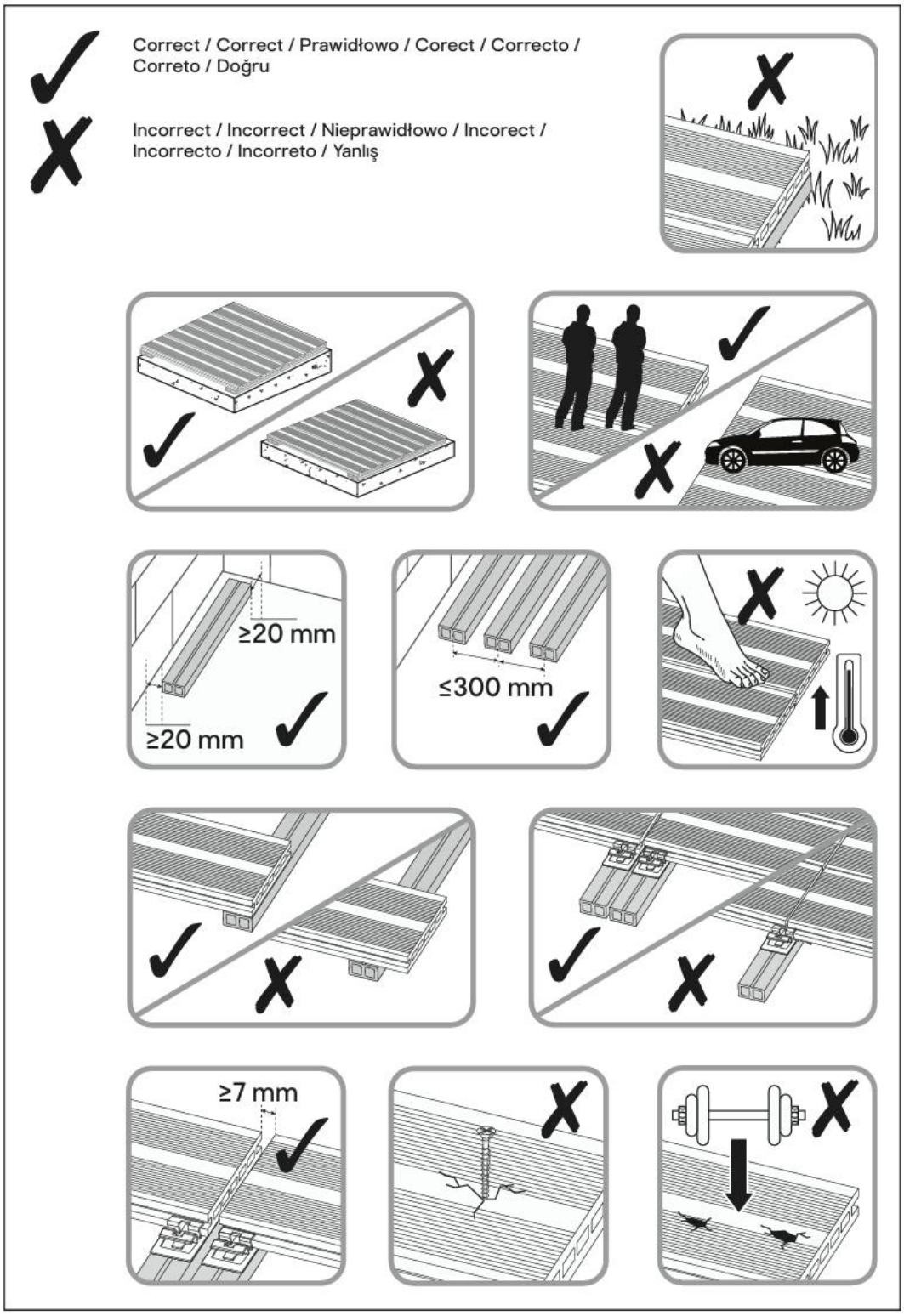

## The Installation of the joist:

When install WPC joist,pre-drilling is required when expanding bolts or wood expansion plugs are used in case the joist may crack;

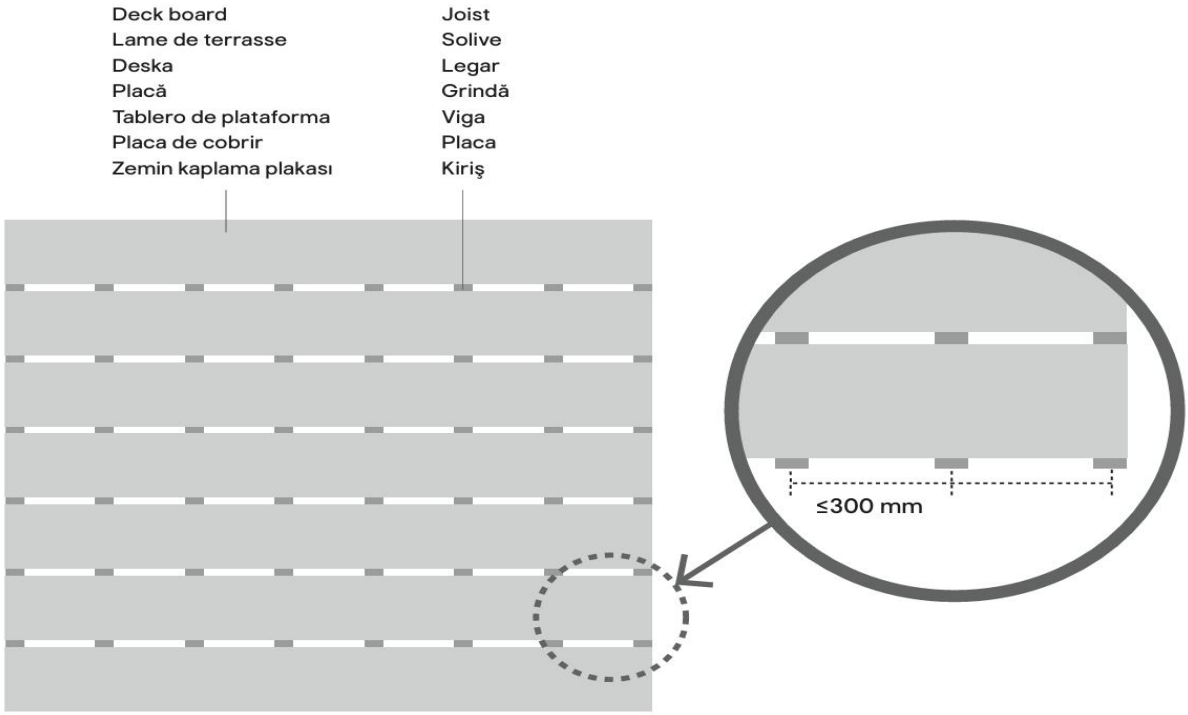


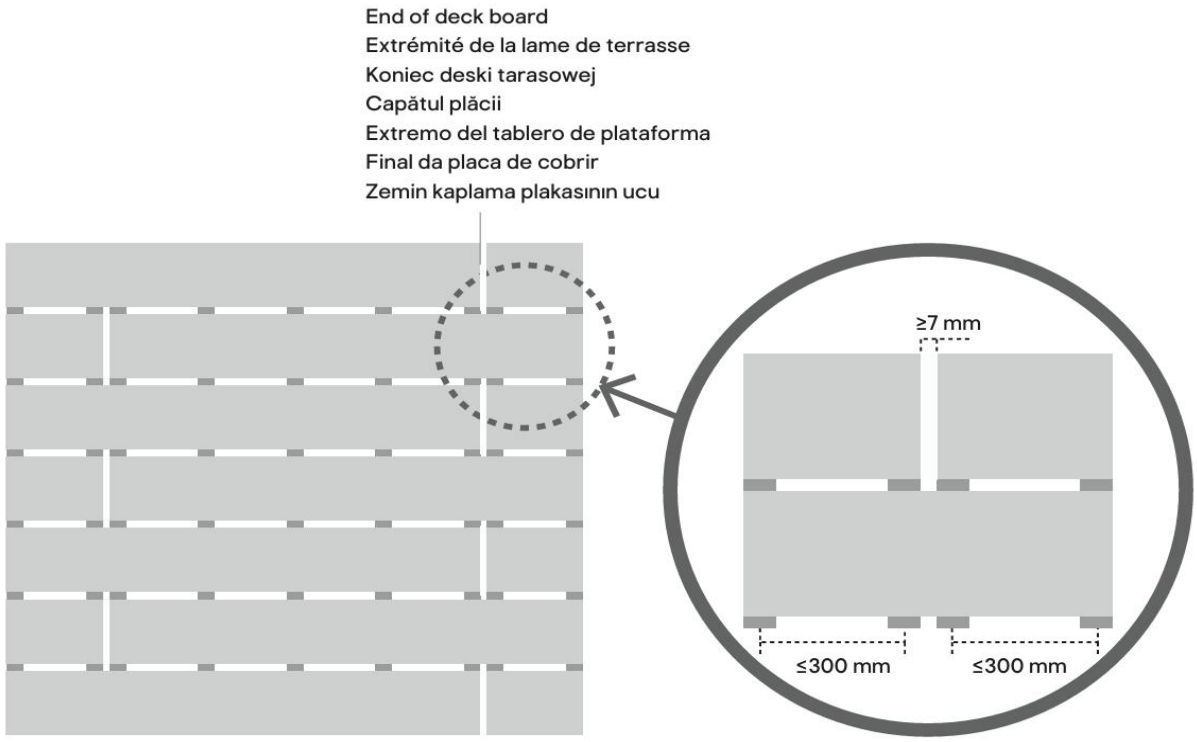


**Important: Each end of the deck board must be supported by 1 joist. Keep at least equal or more than 7 mm space between 2 ends of the deck boards.**

# 01

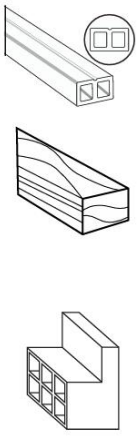

[05]

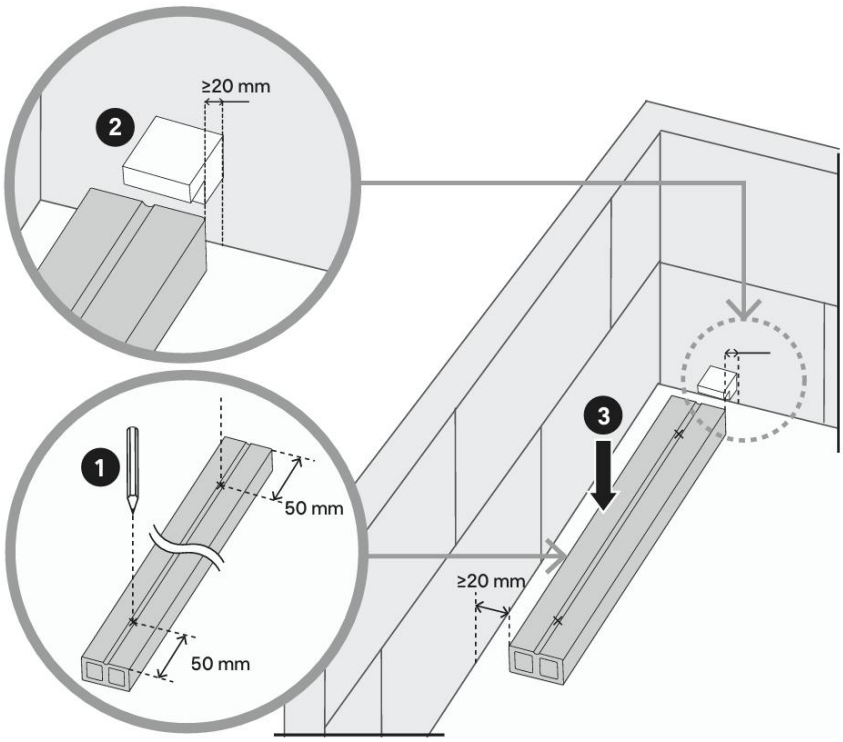


**EN** Measure in 50 mm from each end of the joist and mark with a pencil. Place the joist making sure there is a 20 mm gap between the wall and the joist.

# 02

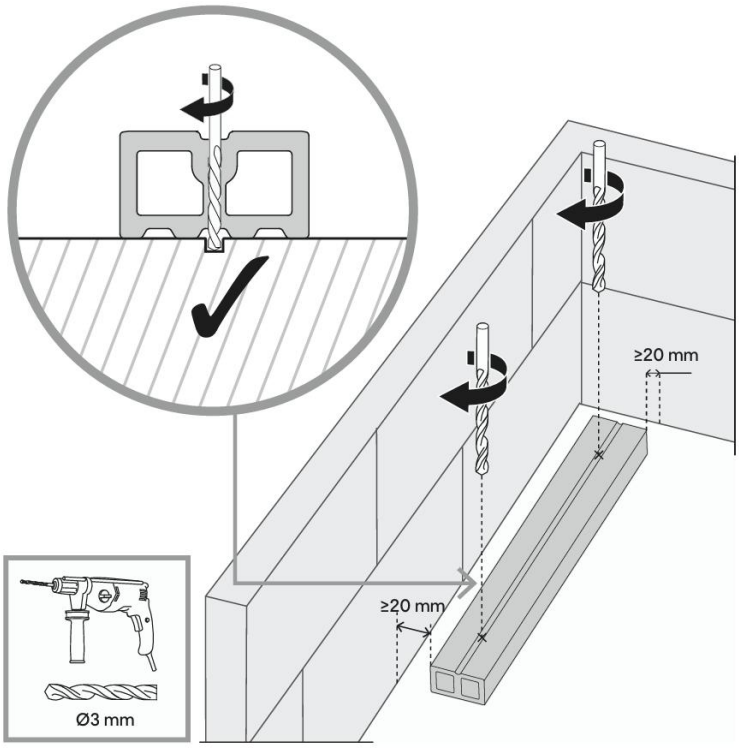





**EN** Using a Ø3 mm drill bit, drill through the centre of the joist until you mark the surface of the concrete/wood base.

# 03

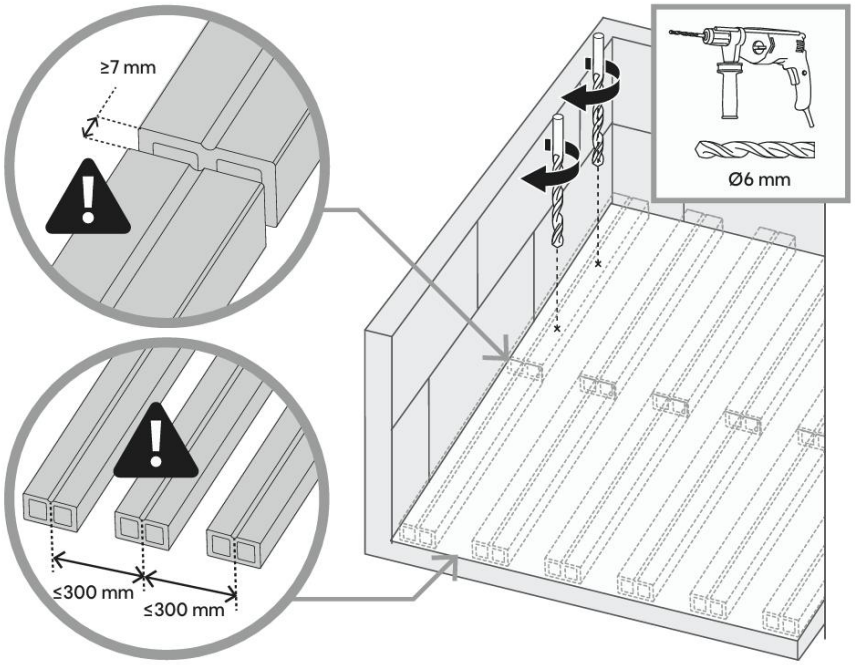


**EN** Remove the joist and drill 2 holes marked on the concrete base (with a Ø6 mm drill bit), or wood base (with a Ø3 mm drill bit). Repeat this step for the whole floor plan making sure there is a gap of 7 mm between each joist end, and ≤300 mm between each joist centre point.

# 04



(Ø6 x 50 mm)



(Ø4 x 80 mm)

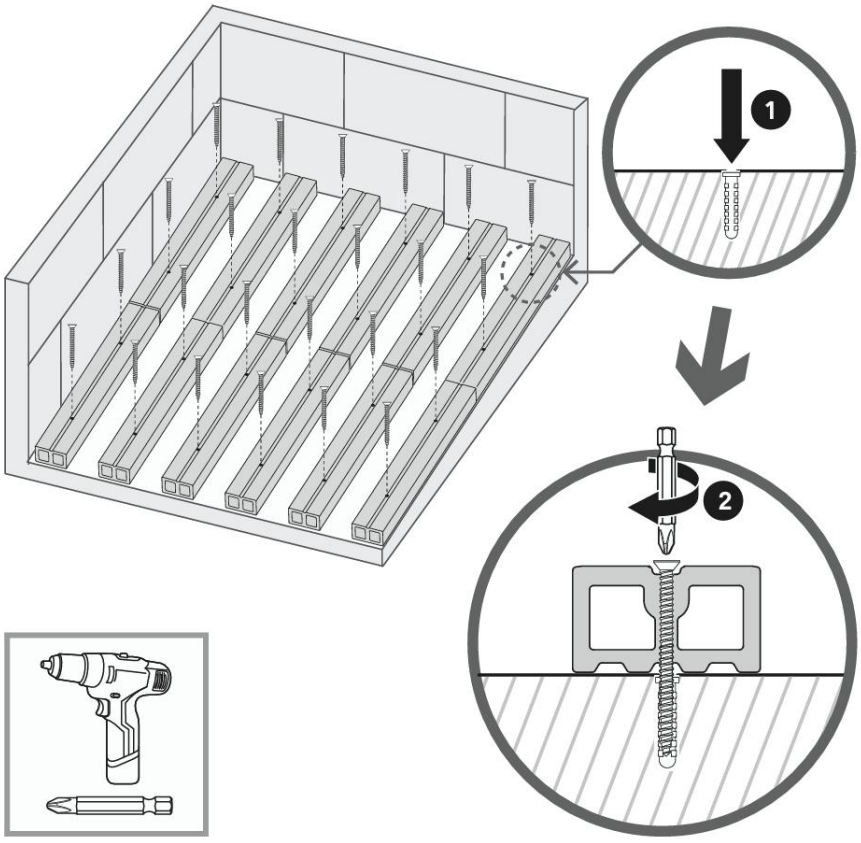


**EN** Insert the plug into the concrete base or screw directly into wood base. Securely screw into place.

# 05

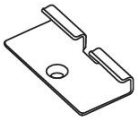

[03]



[06]

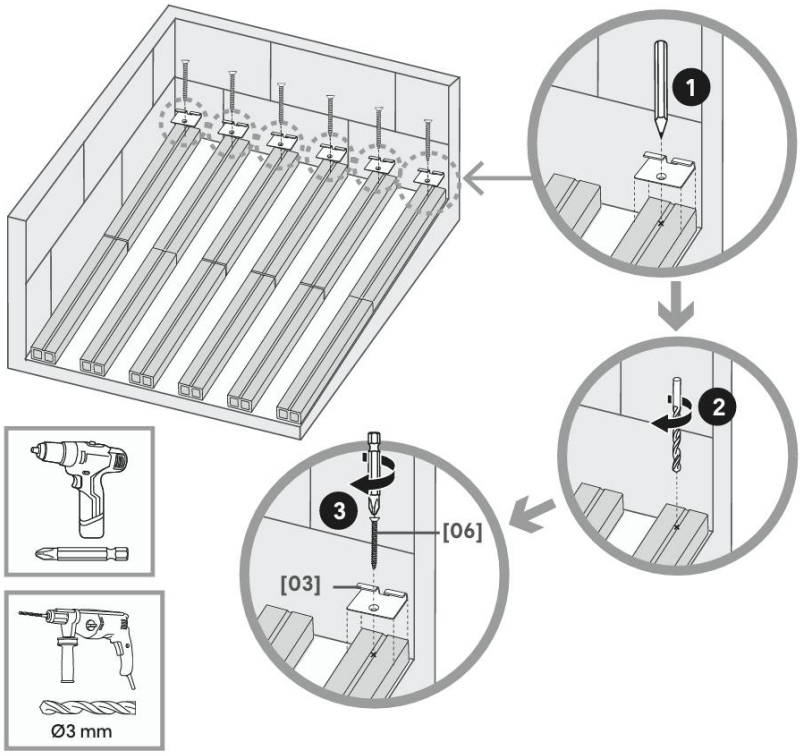


**EN** Place starter clips at the end of each joist closest to the wall, then mark the hole for drilling. Using a Ø3 mm drill bit, drill a hole then screw the starter clip in place. Each clip should be flush against the joist.

# 06

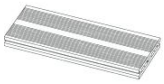

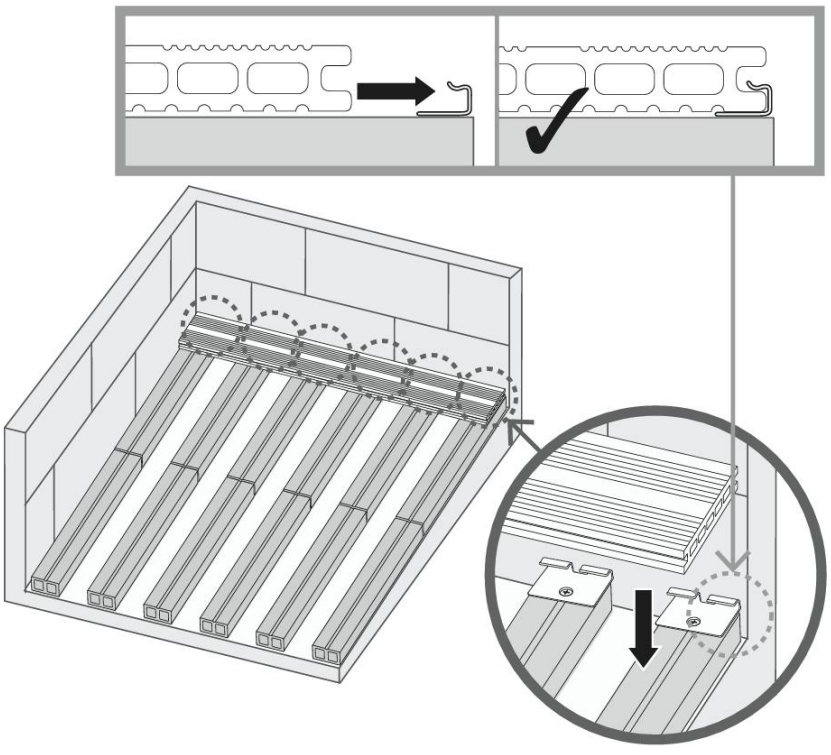

**EN** Insert the first piece of deck board into the starter clips. A plastic mallet can be used to assist you to fit the deck board into place. Make sure each deck board does not overlap of hang off a joist.

# 07



[01]



[02]

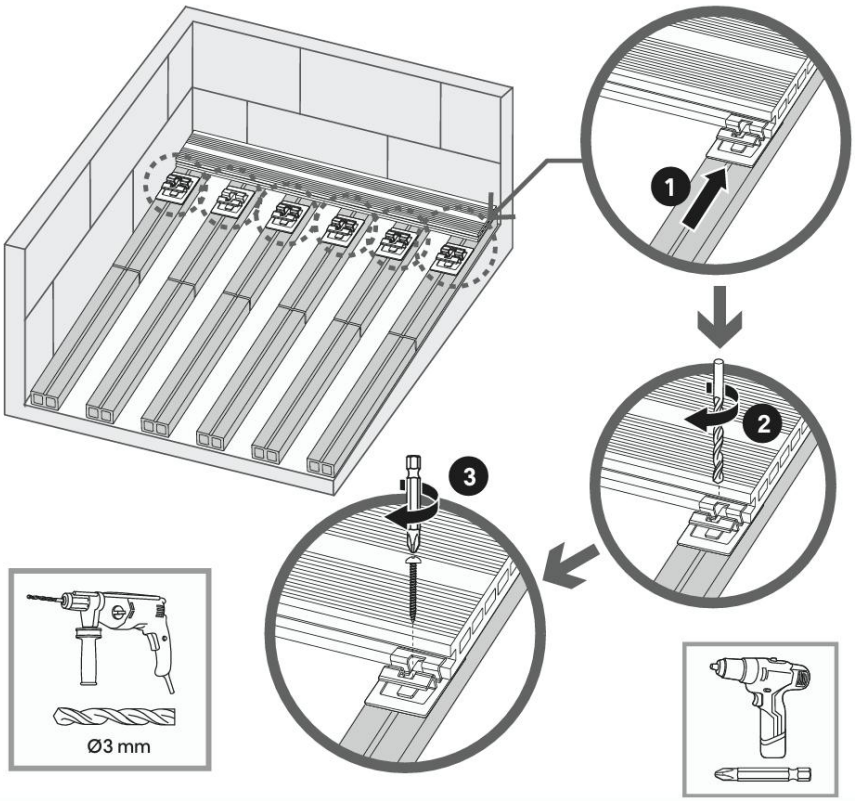


**EN** Insert a hidden clip between each deck board, then drill into the joist and screw into place.

# 08

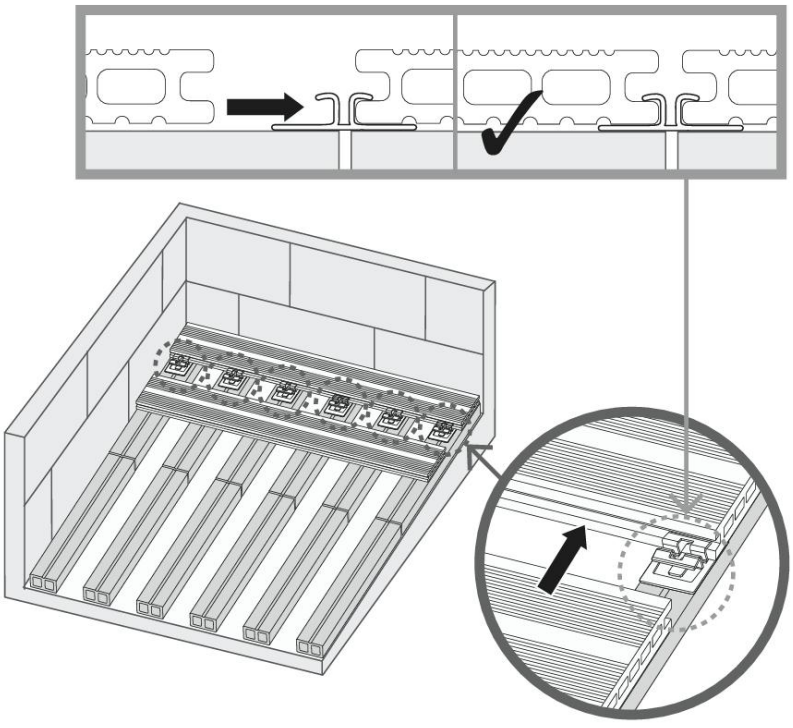

**EN** Continue inserting each deck board into the hidden clips making sure each deck board does not overlap or hang off a joist. Repeat steps 7 and 8 until whole deck board is complete.

# 09

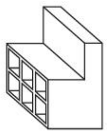

[05]

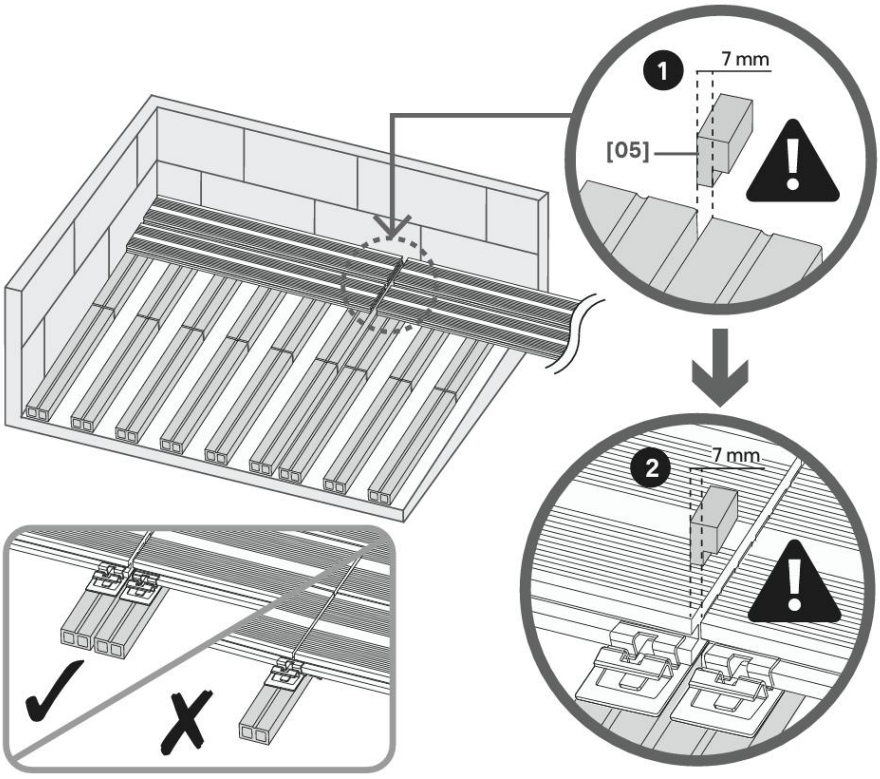


**EN** Where two ends of a deck board meet, make sure they are supported individually by their own joist. A gap of 7 mm should be kept between the two joist and the end of the deck board.

# 10



[04]



[06]

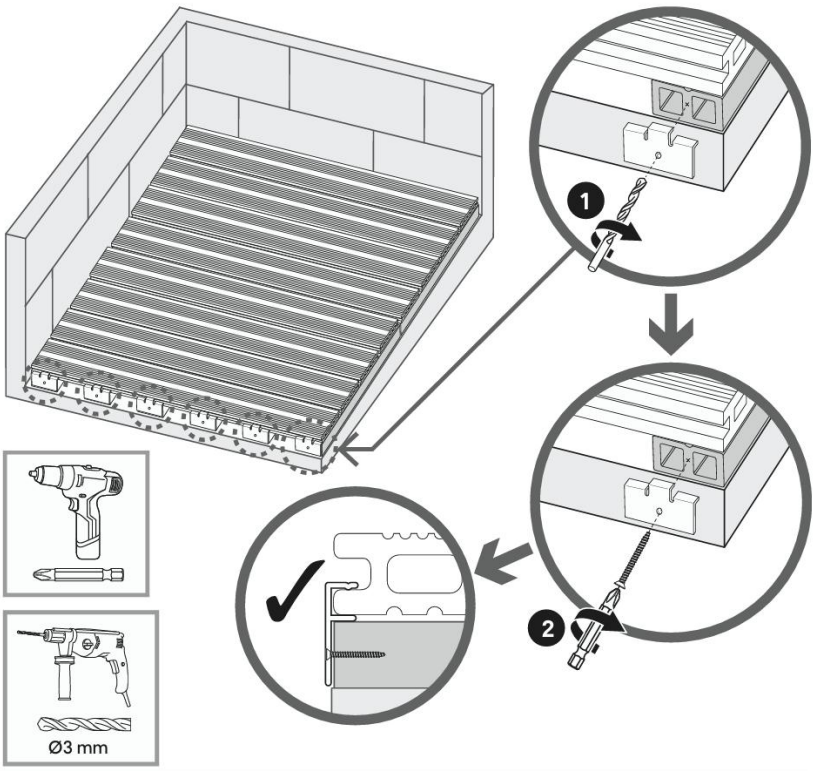


**EN** Insert the end clip to the last deck board and against the end of a joist. Drill into the clip with Ø3 mm drill bit, then screw the clip into place. Repeat this for each joist end.

# 11

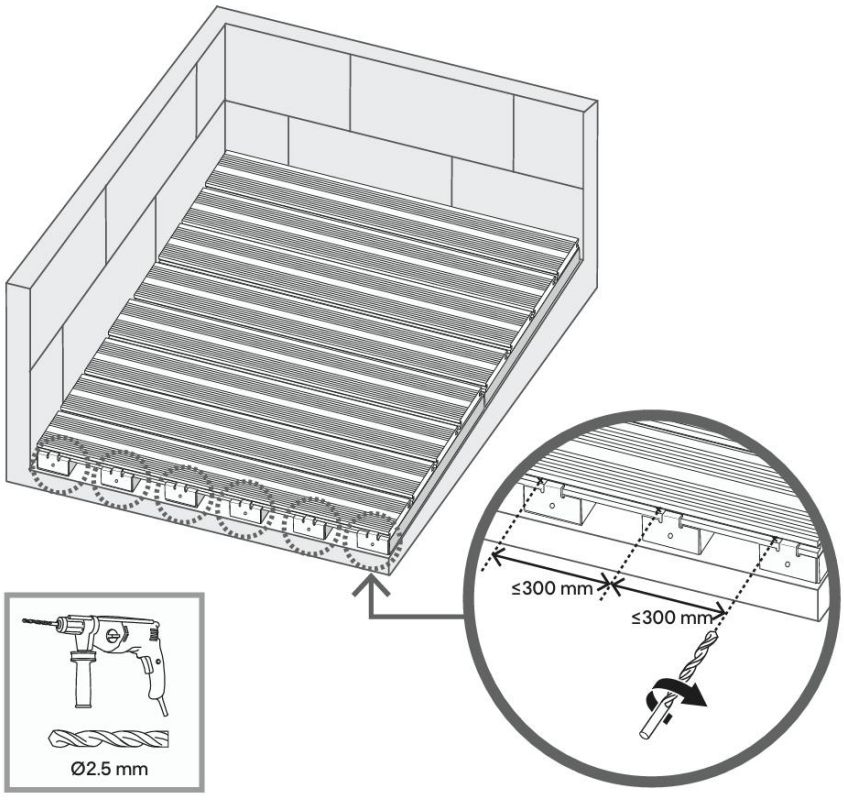


**EN** Finish off the long side of the deck board by placing the finishing profile into place and drilling into the deck board with a Ø2.5 mm drill bit.

# 12

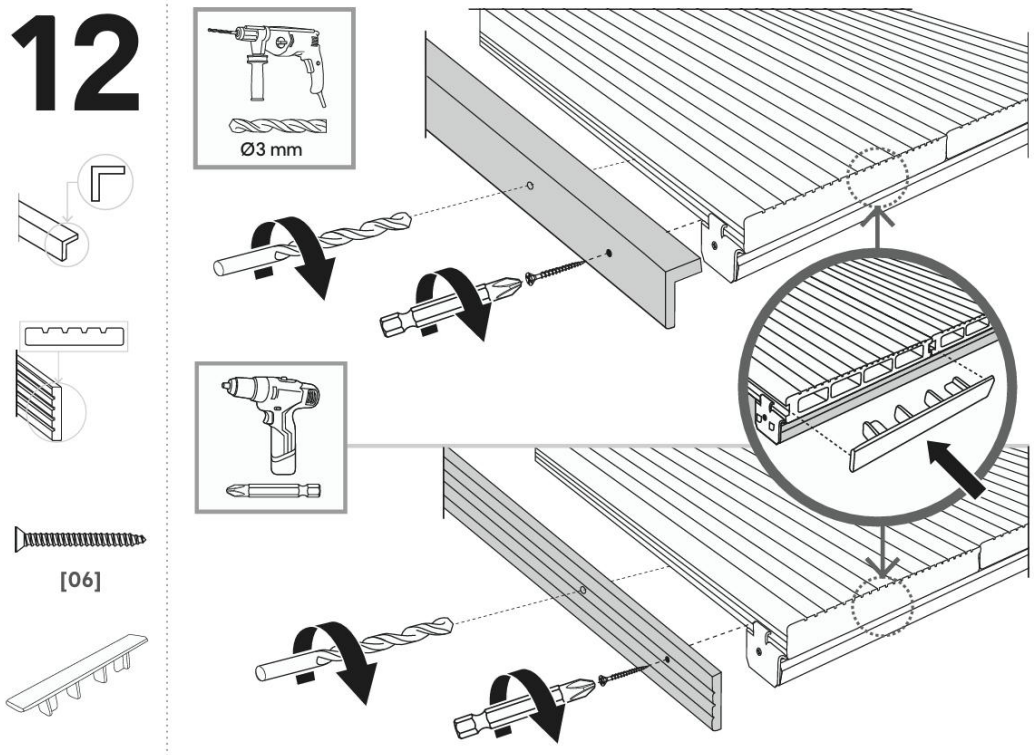


**EN** Screw the finishing profile into place making sure it is flush to the surface of the deck board. At the end of each deck board, insert an end cap to close off the deck board.